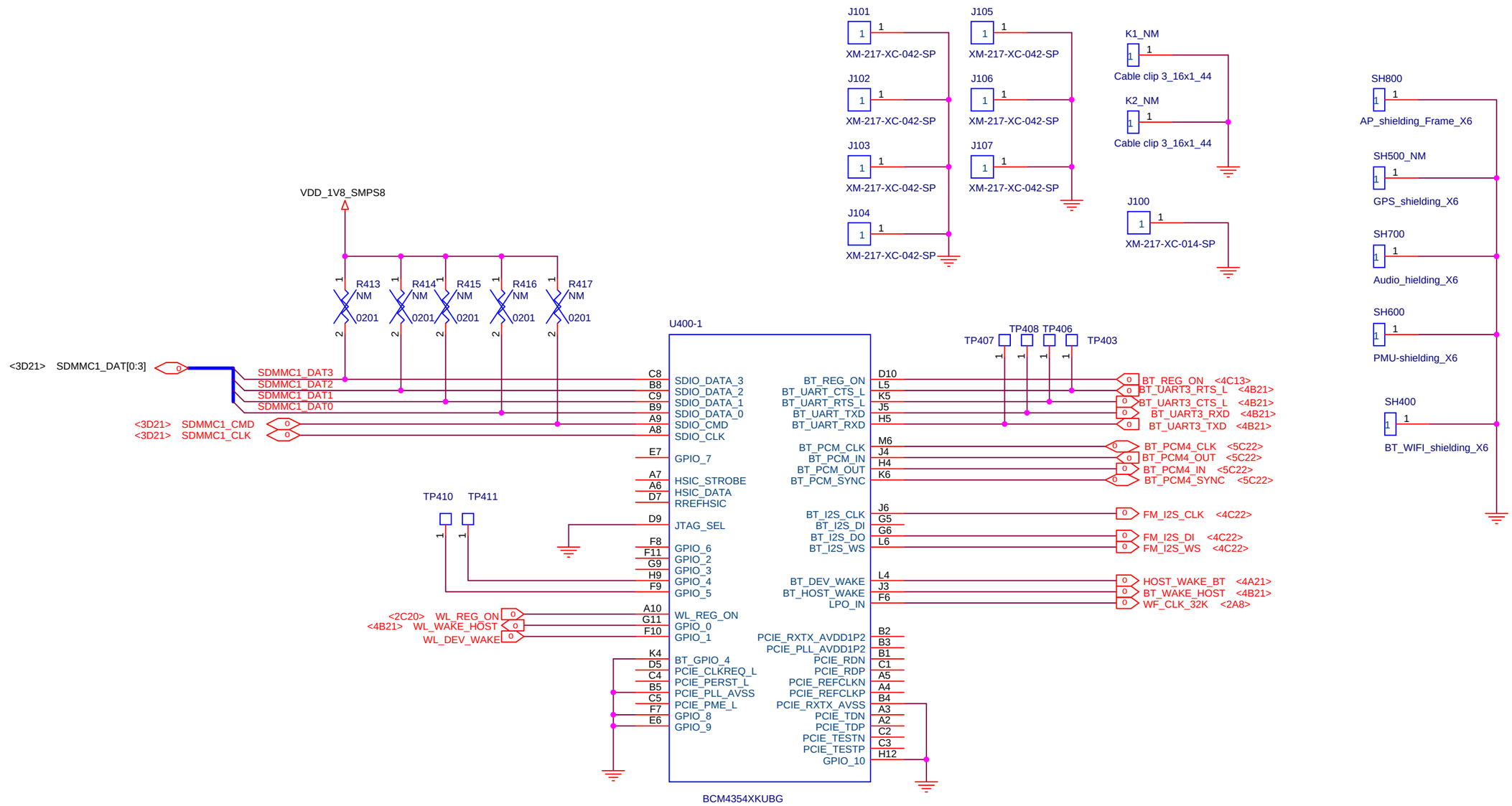


BT/WIFI INTERFACE

| | | |
|---|---|---|
| Title | MI-THREE | |
| Size A3 | Document Number <Doc> | Rev P2B |
| Date: | Sheet 1 of 26 | |

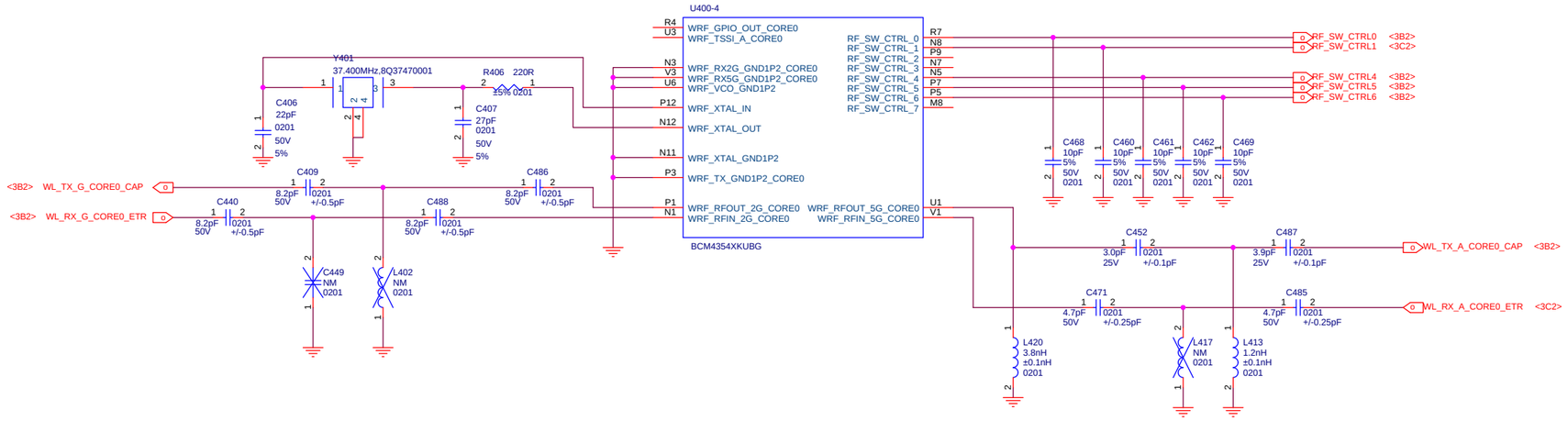


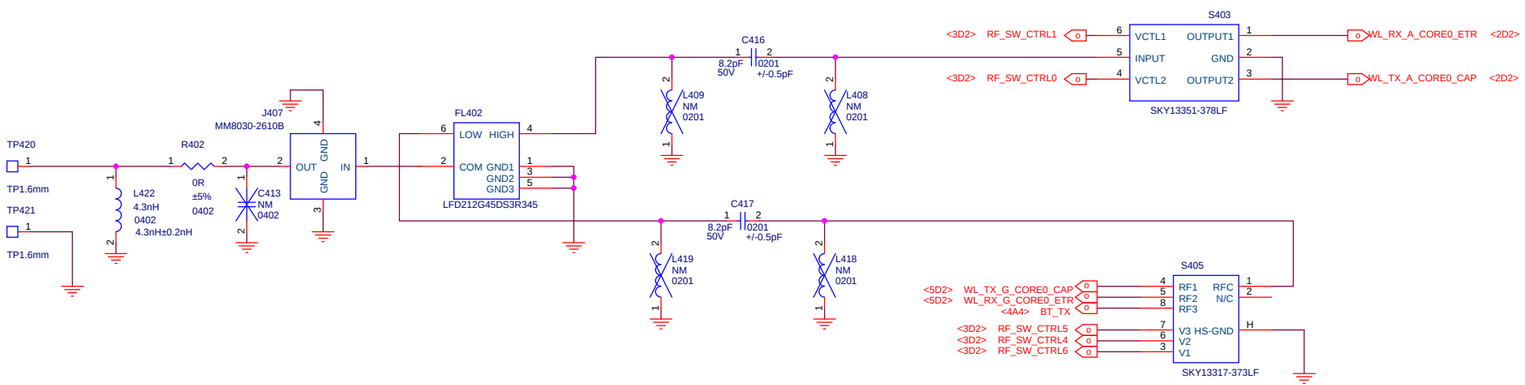


| | |
|---|---|
| Title | MI-THREE |
| Size A2 | Document Number <Doc> |
| Rev | P2B |
| Date: | Sheet 2 of 26 |

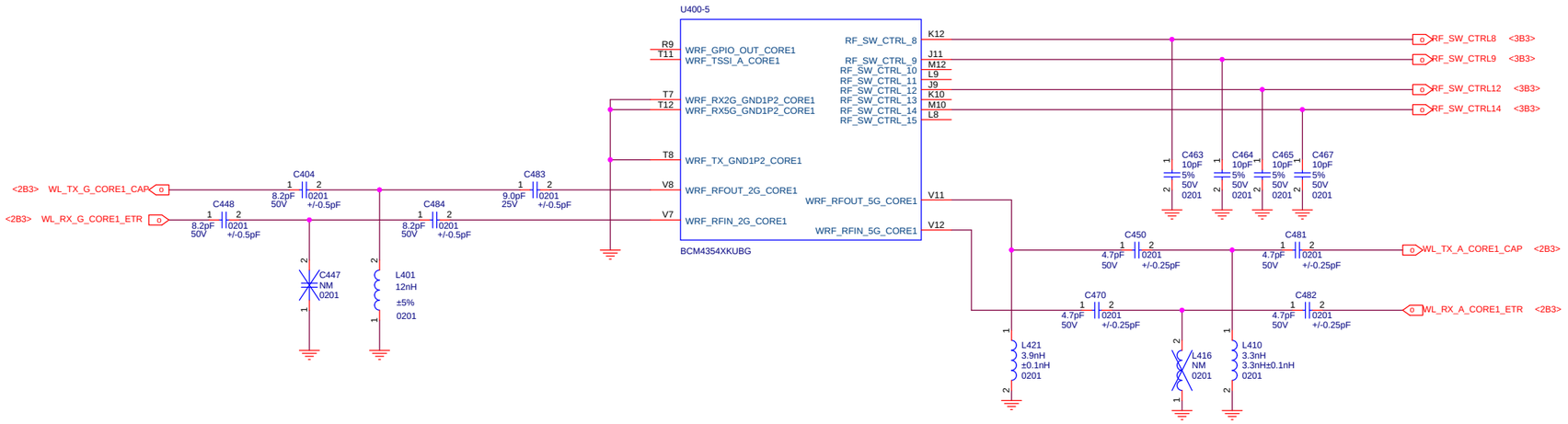


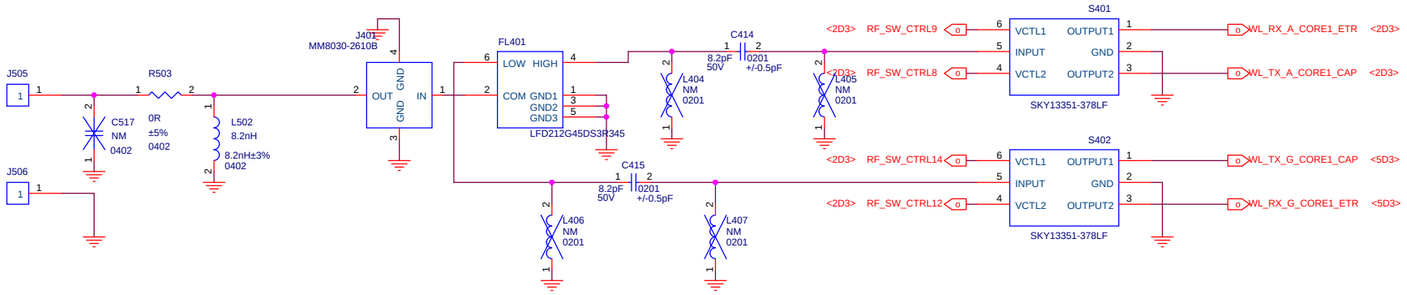


| | |
|---|---|
| Title | MI-THREE |
| Size A2 | Document Number <Doc> |
| Rev | P2B |
| Date: | Sheet 3 of 26 |

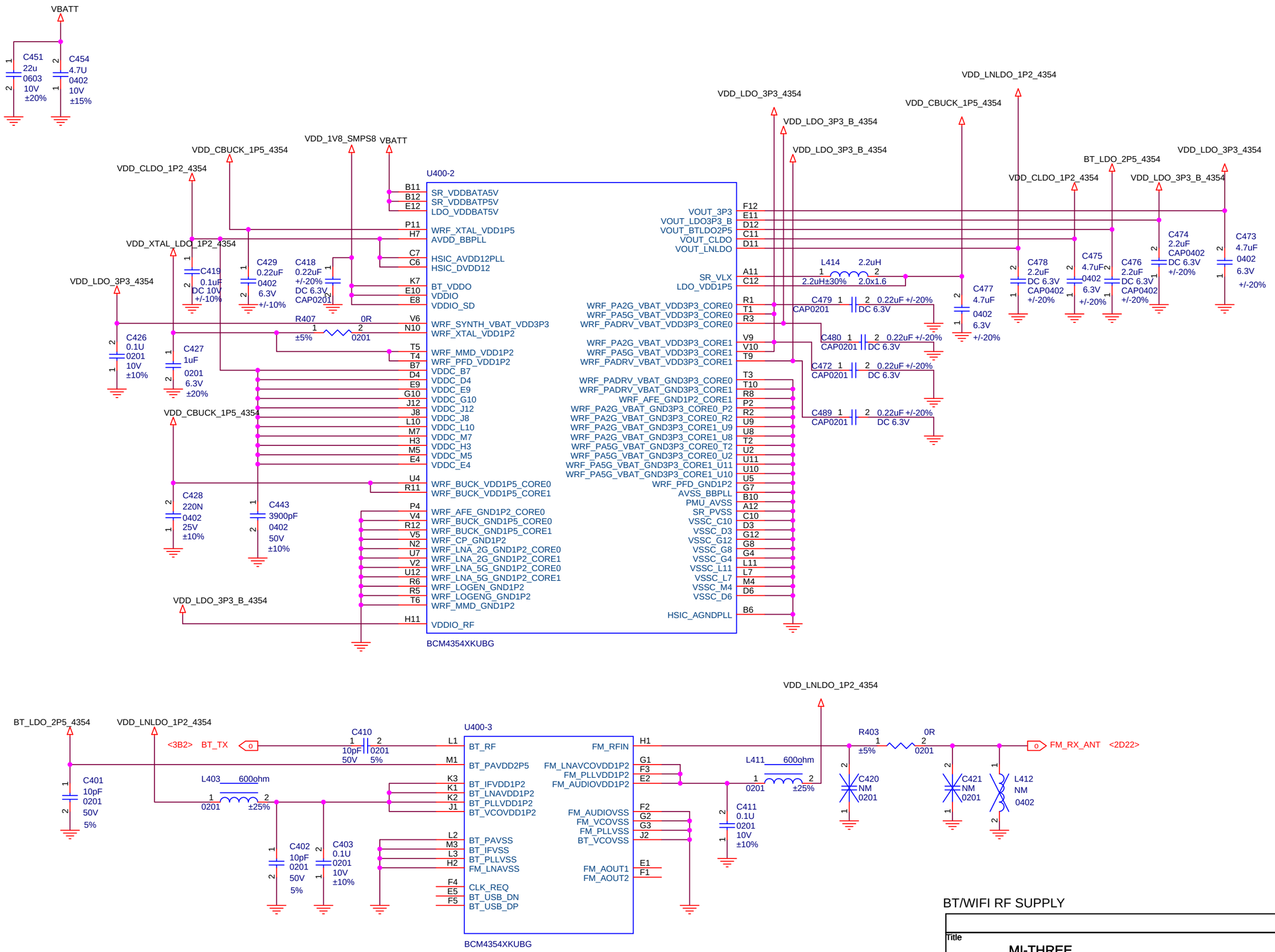


BT/WIFI RF SUPPLY

| | | |
|---|---|---|
| Title | MI-THREE | |
| Size A3 | Document Number <Doc> | Rev P2B |
| Date: | Sheet 4 of 26 | |

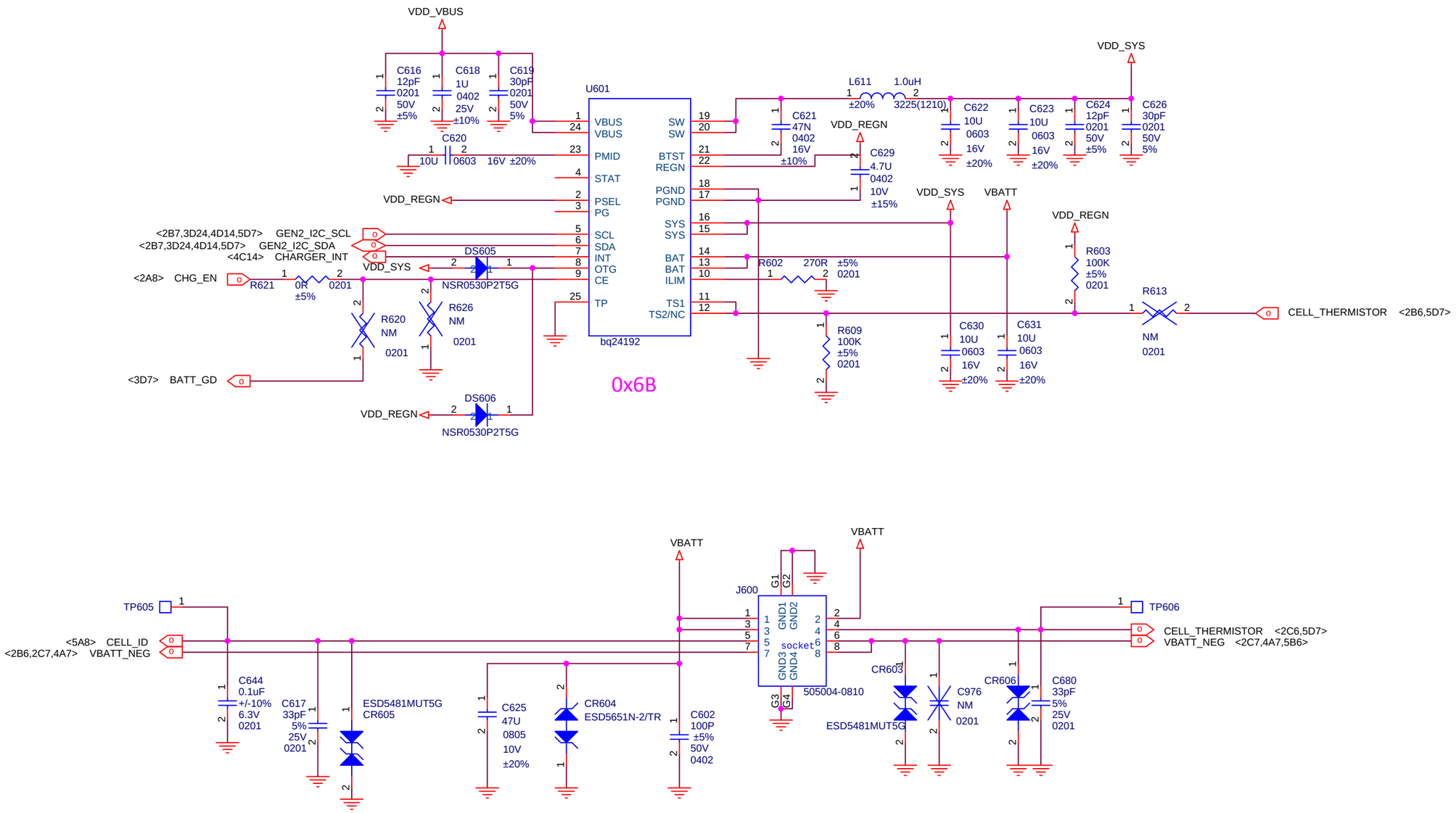





CHARGER

| | | |
|---|---|---|
| Title | MI-THREE | |
| Size A3 | Document Number <Doc> | Rev P2B |
| Date: | Sheet 6 of 26 | |

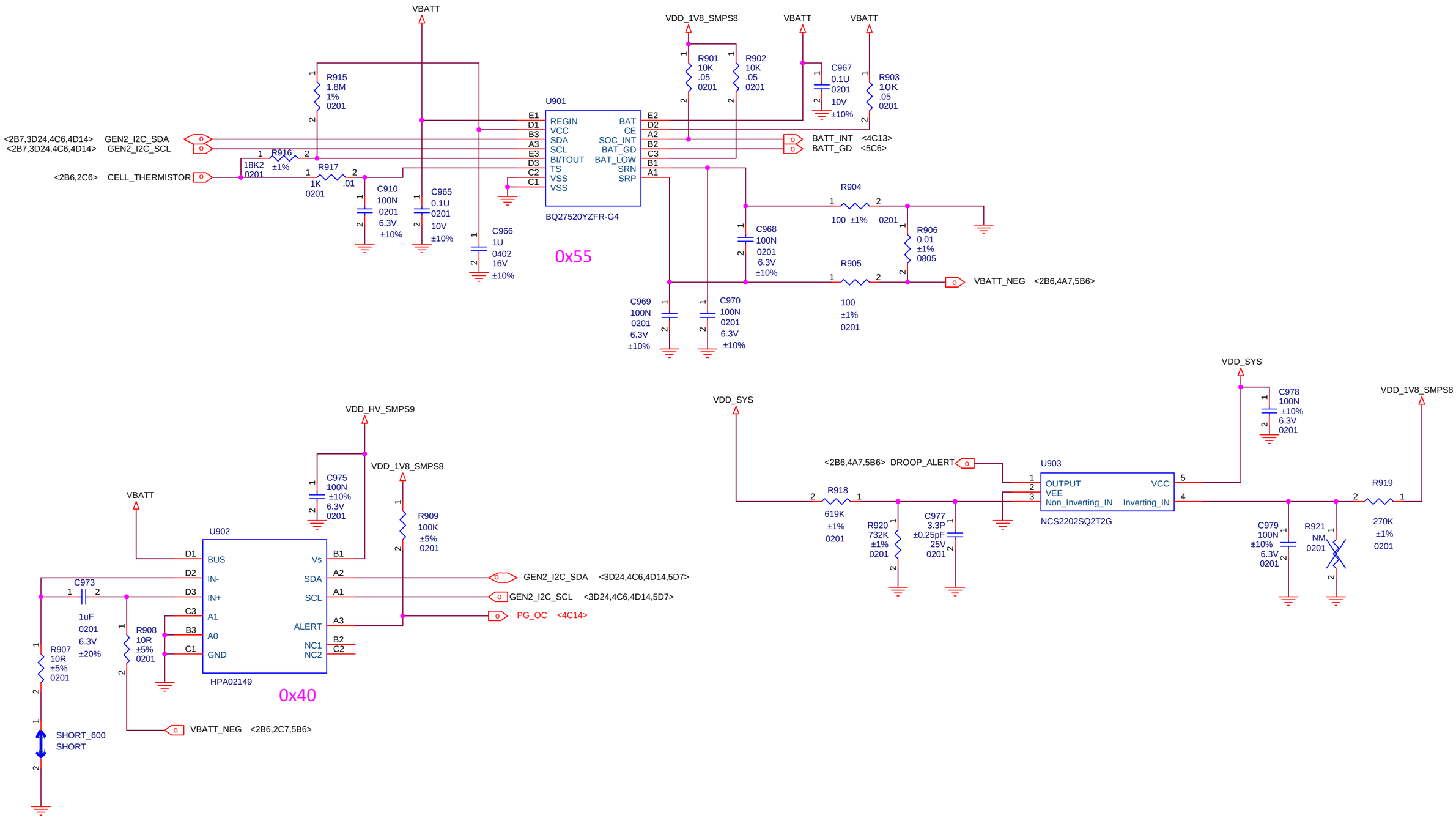


FLASH&HAPTIC

| | | |
|---|---|---|
| Title | MI-THREE | |
| Size A3 | Document Number <Doc> | Rev P2B |
| Date: | Sheet 7 of 26 | |

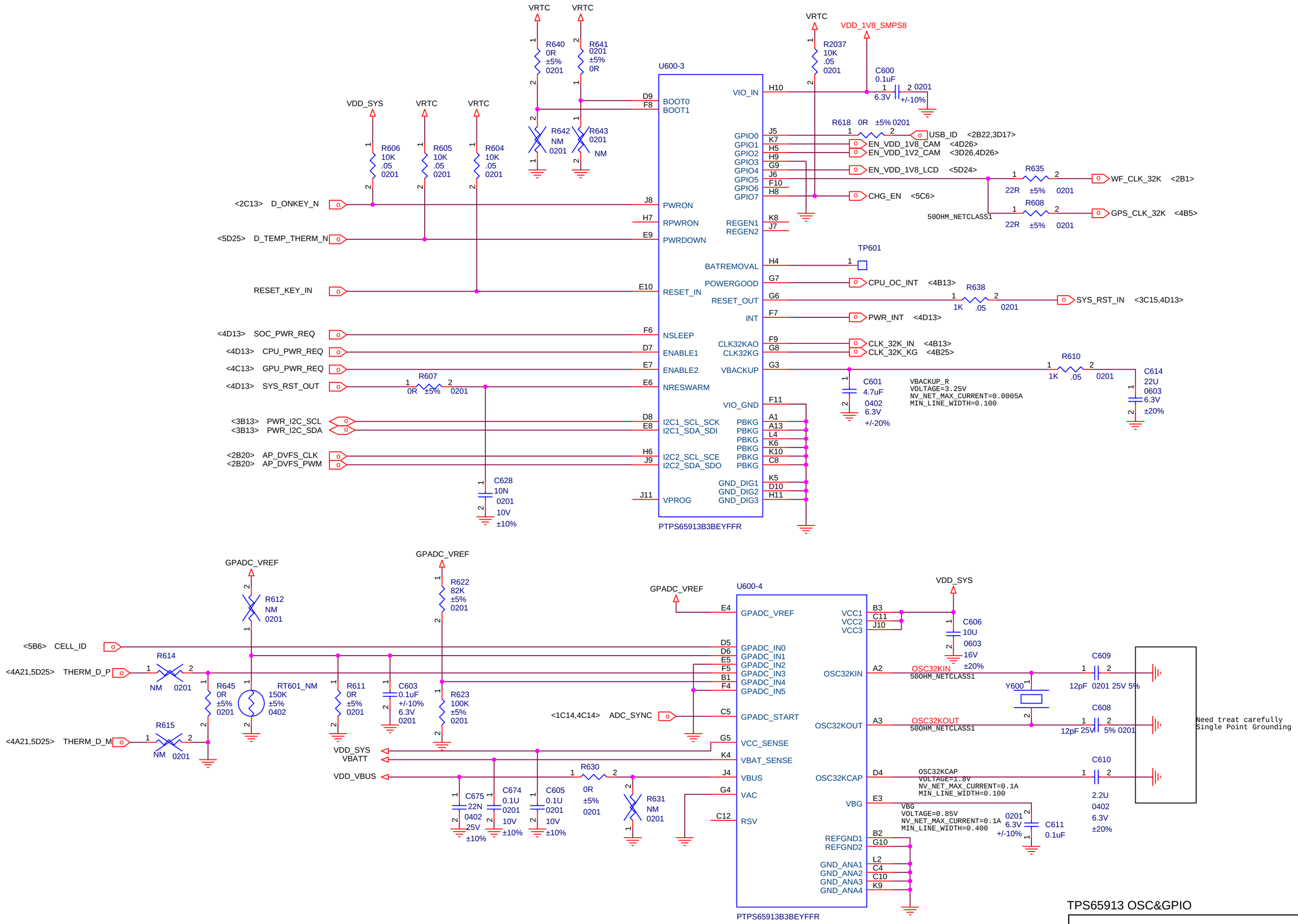


TPS65913 OSC&GPIO

| | | |
|---|---|---|
| Title | MI-THREE | |
| Size A3 | Document Number <Doc> | Rev P2B |
| Date: | Sheet 8 of 26 | |

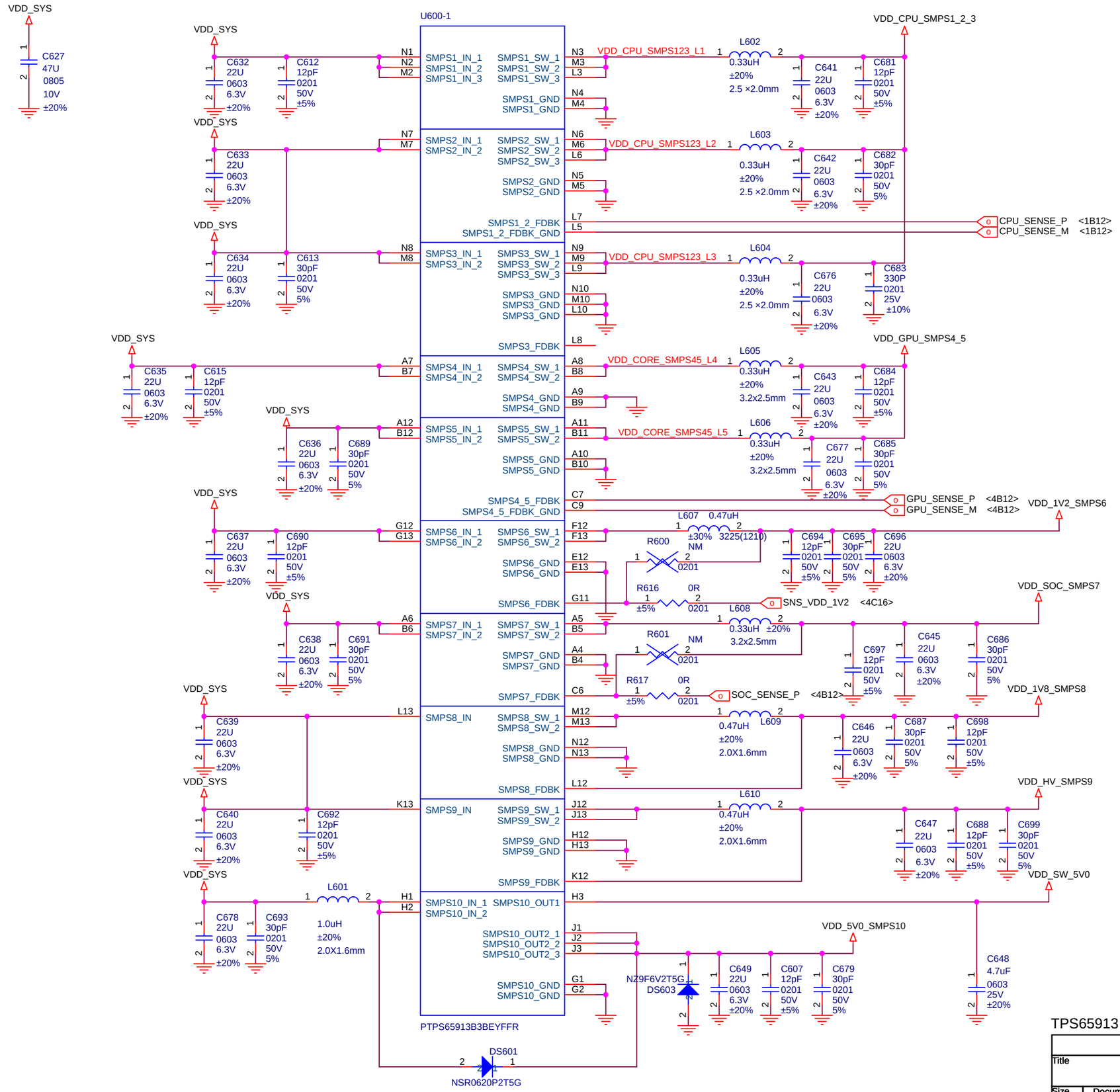


TPS65913 SMPS

| | |
|---|---|
| Title | MI-THREE |
| Size A3 | Document Number <Doc> |
| Rev | P2B |
| Date: | Sheet 9 of 26 |

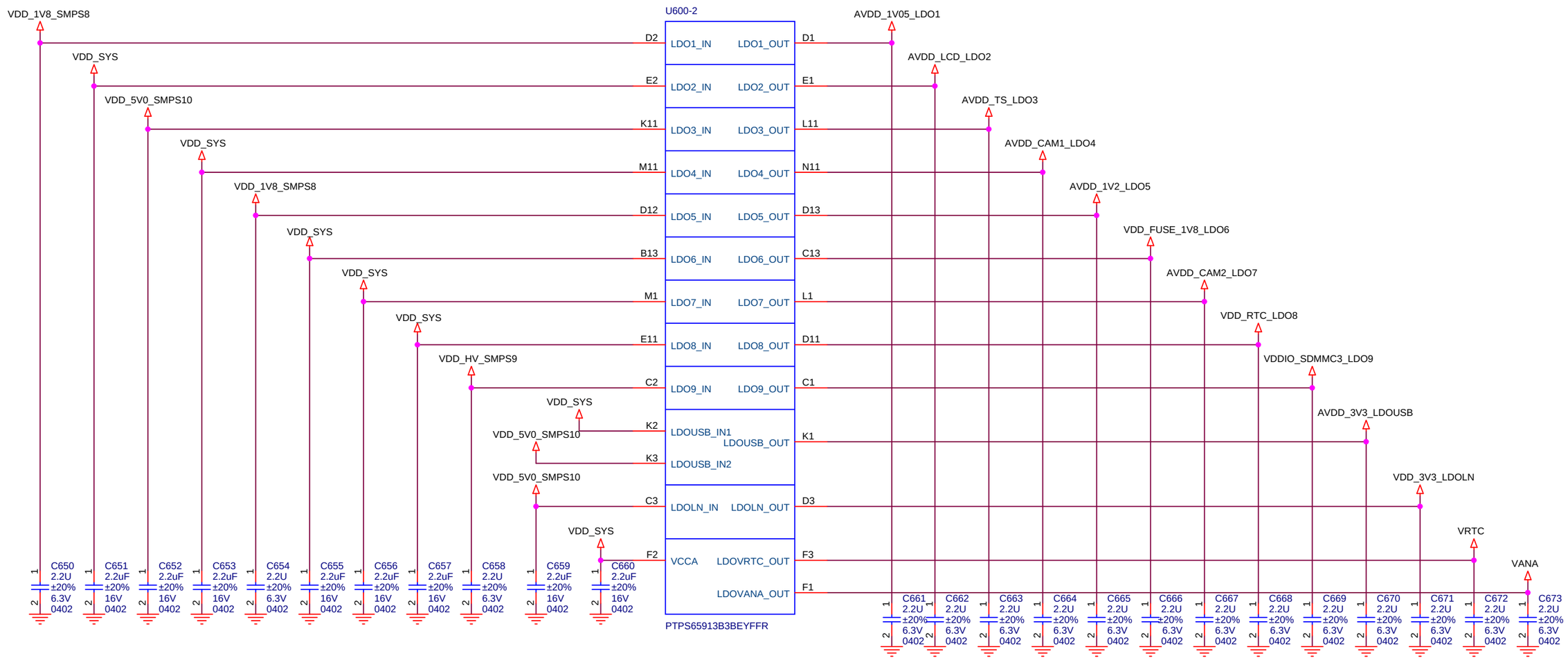


TPS65913 LDO

| | | |
|---|---|---|
| Title | MI-THREE | |
| Size A3 | Document Number <Doc> | Rev P2B |
| Date: | Sheet 10 of 26 | |

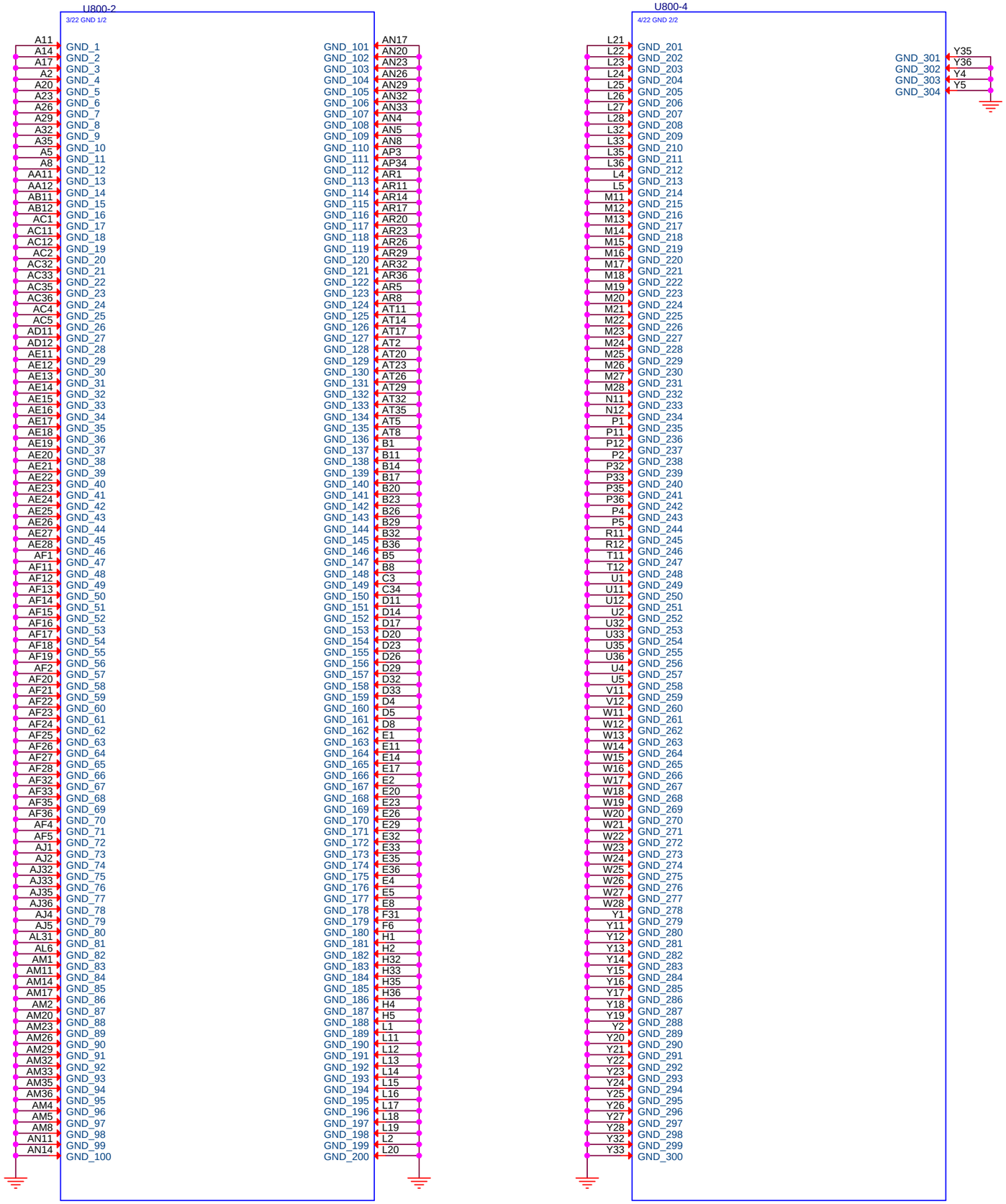


AP40-3 GND

| | | |
|---|---|---|
| Title | MI-THREE | |
| Size A3 | Document Number <Doc> | Rev P2B |
| Date: | Sheet 11 of 26 | |

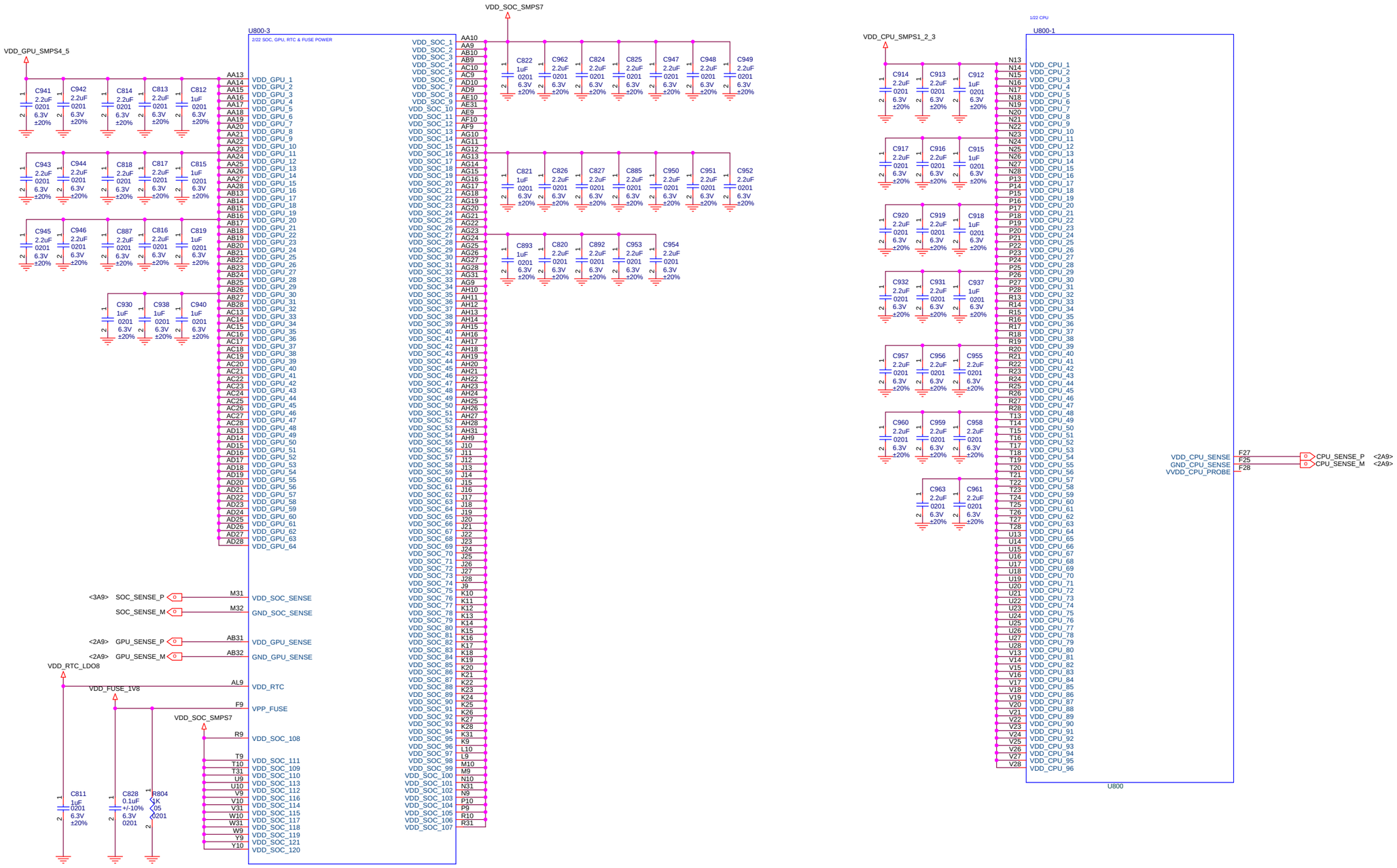


AP40-4 CORE&CPU

| | | |
|---|---|---|
| Title | MI-THREE | |
| Size A2 | Document Number <Doc> | Rev P2B |
| Date: | Sheet 12 of 26 | |

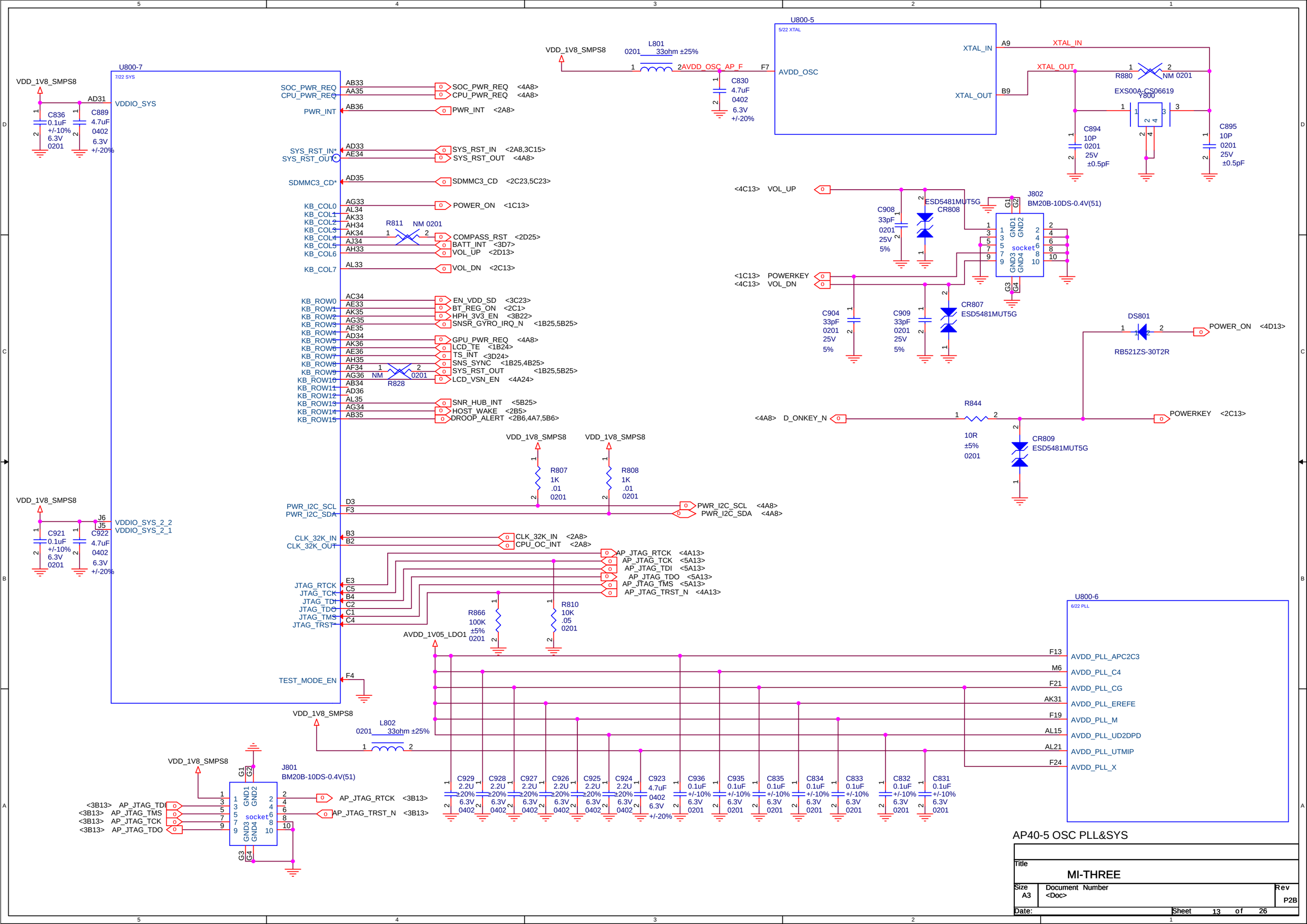


AP40-5 OSC PLL&SYS

| | | |
|---|---|---|
| Title | MI-THREE | |
| Size A3 | Document Number <Doc> | Rev P2B |
| Date: | Sheet 13 of 26 | |

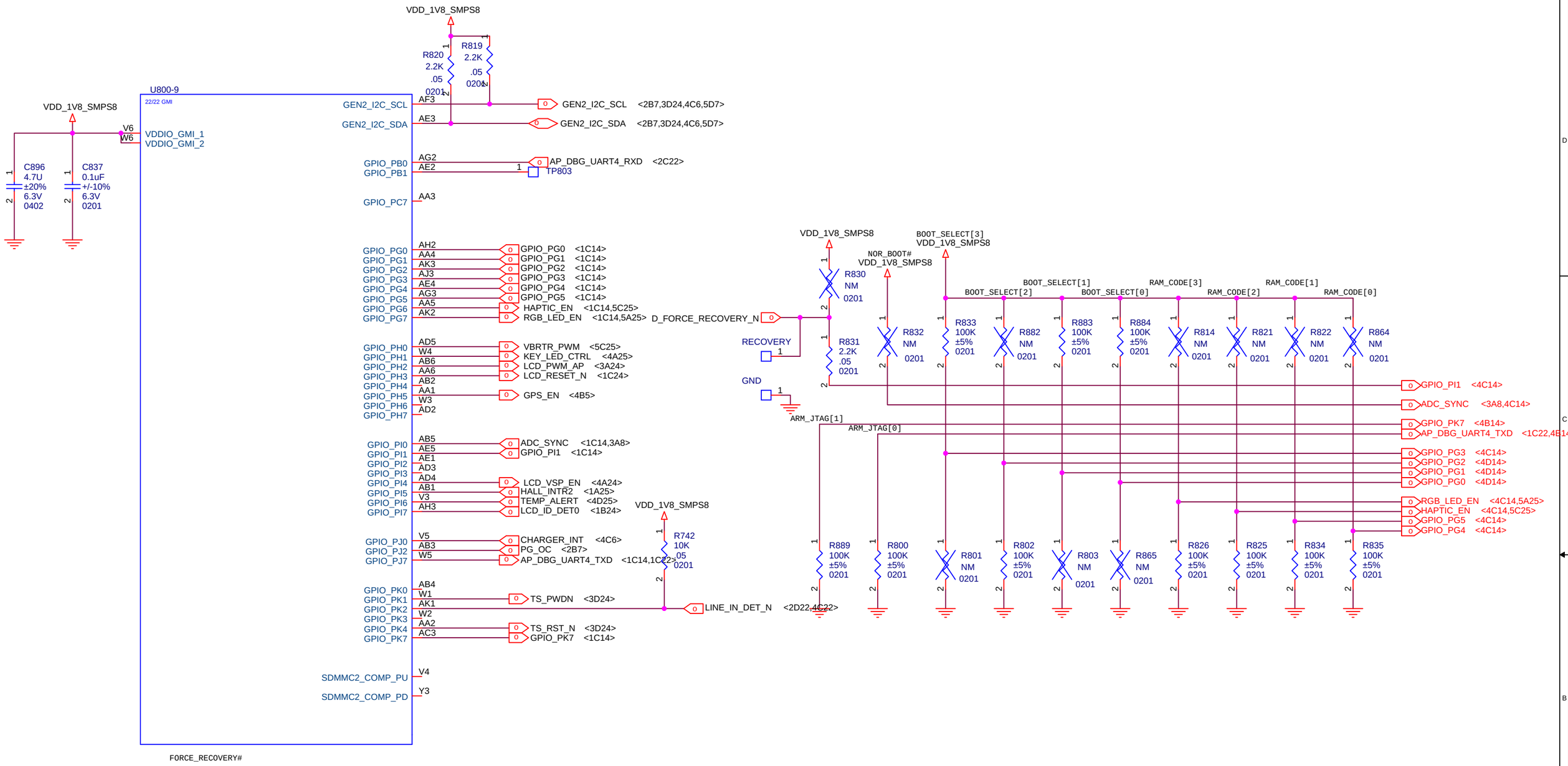


AP40-6 GMI

| | | |
|---|---|---|
| Title | MI-THREE | |
| Size A3 | Document Number <Doc> | Rev P2B |
| Date: | Sheet 14 of 26 | |

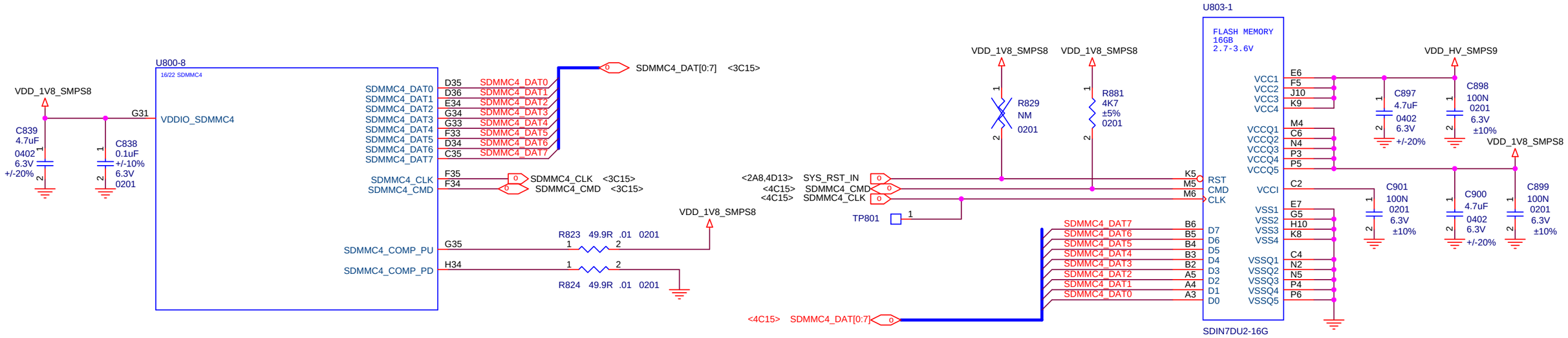


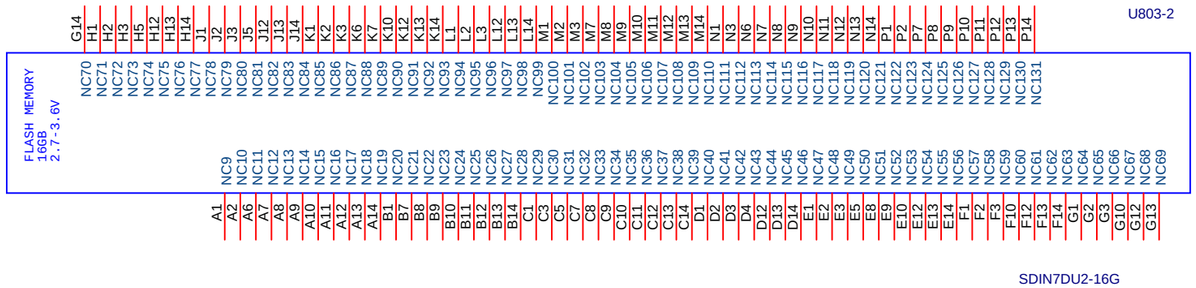


AP40 EMMC

| | |
|---|---|
| Title | MI-THREE |
| Size A3 | Document Number <Doc> |
| Rev | P2B |
| Date: | Sheet 15 of 26 |

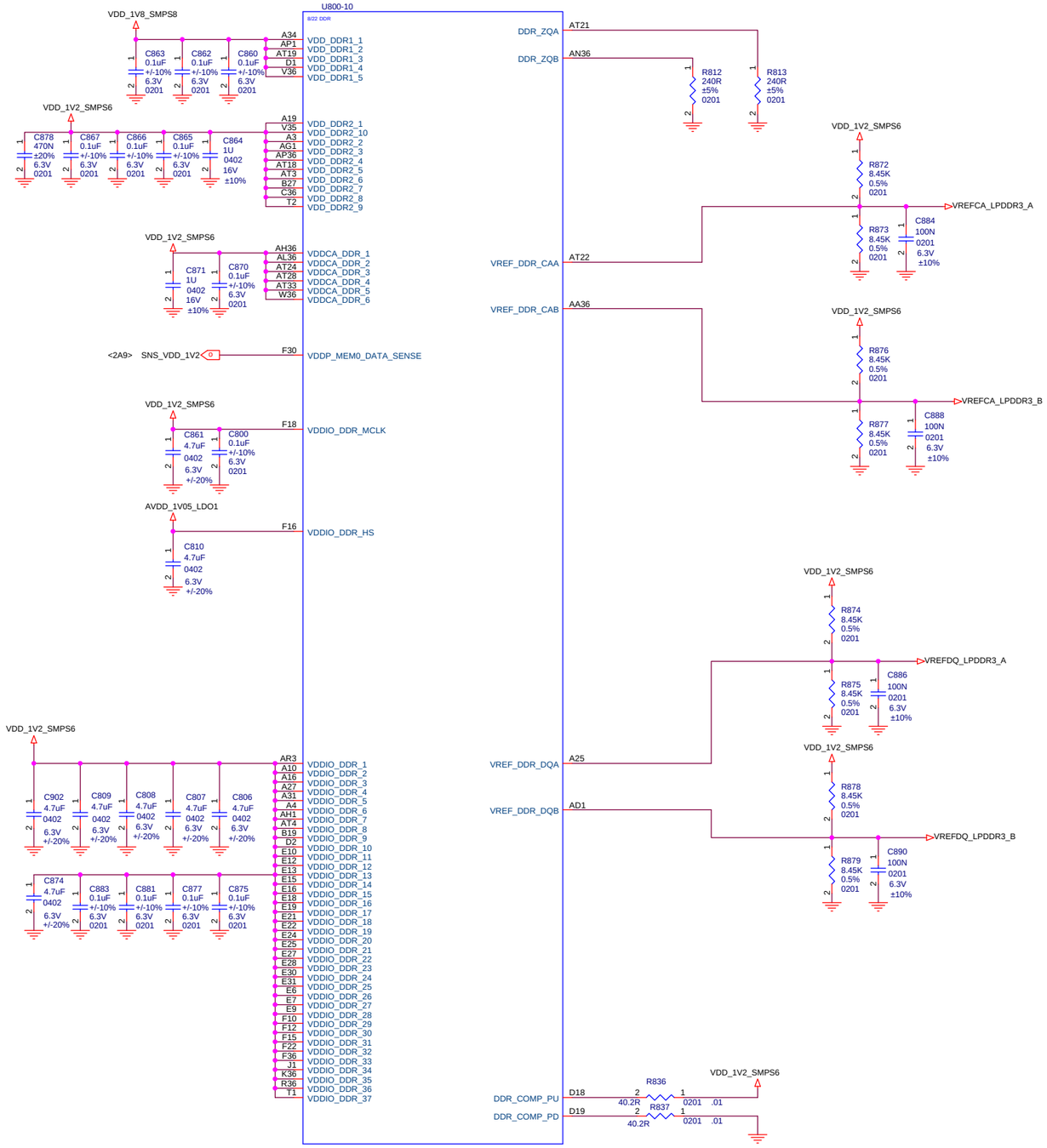


| | | | |
|---|---|---|---|
| Title | MI-THREE | | |
| Size A2 | Document Number <Doc> | | Rev P2B |
| Date: | | Sheet 16 of 26 | |

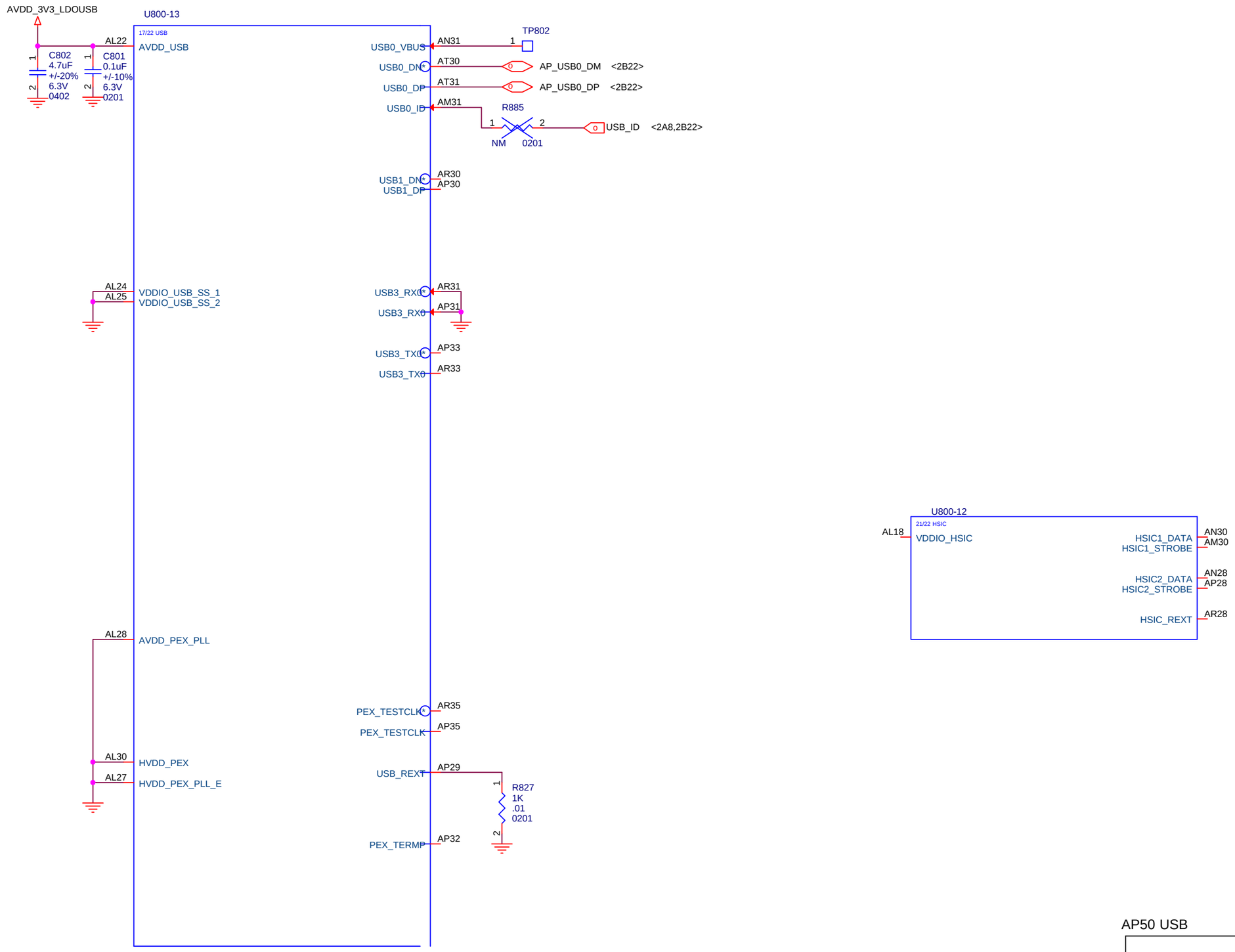


AP50 USB

| | | |
|---|---|---|
| Title | MI-PAD | |
| Size A3 | Document Number <Doc> | Rev P2B |
| Date: | Sheet 17 of 26 | |

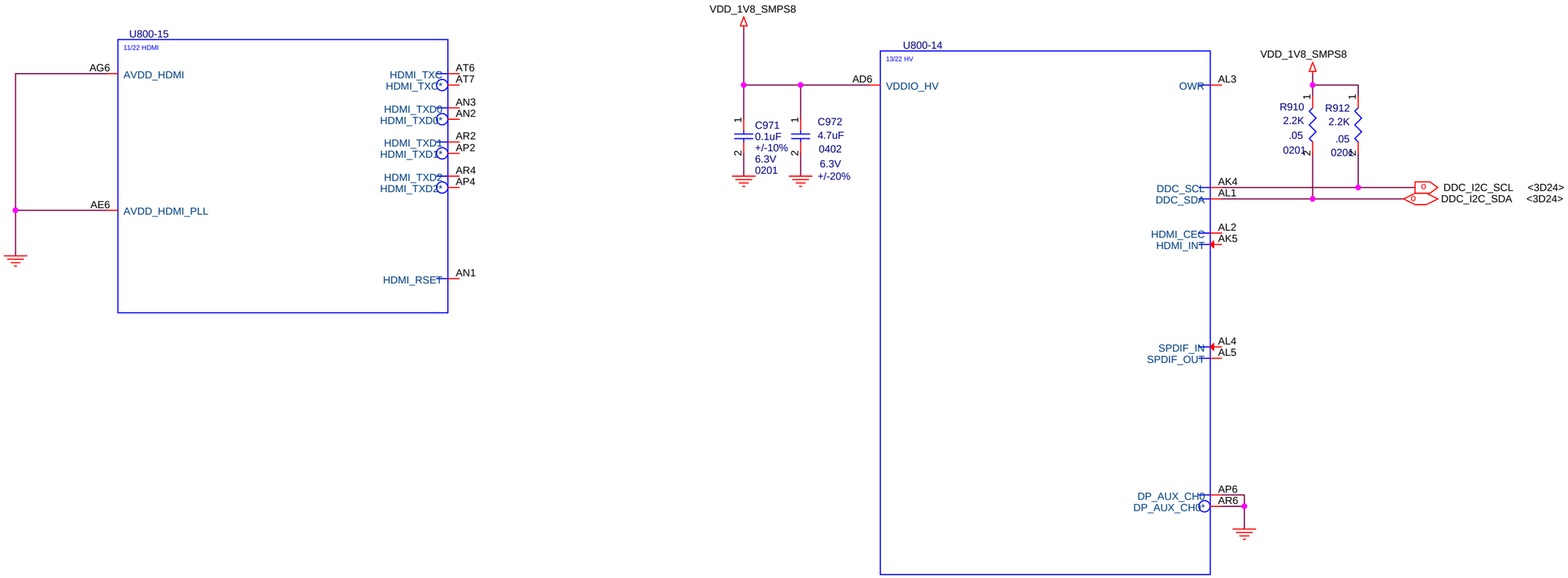


HDMI

| | | |
|---|---|---|
| Title | MI-THREE | |
| Size A3 | Document Number <Doc> | Rev P2B |
| Date: | Sheet 18 of 26 | |

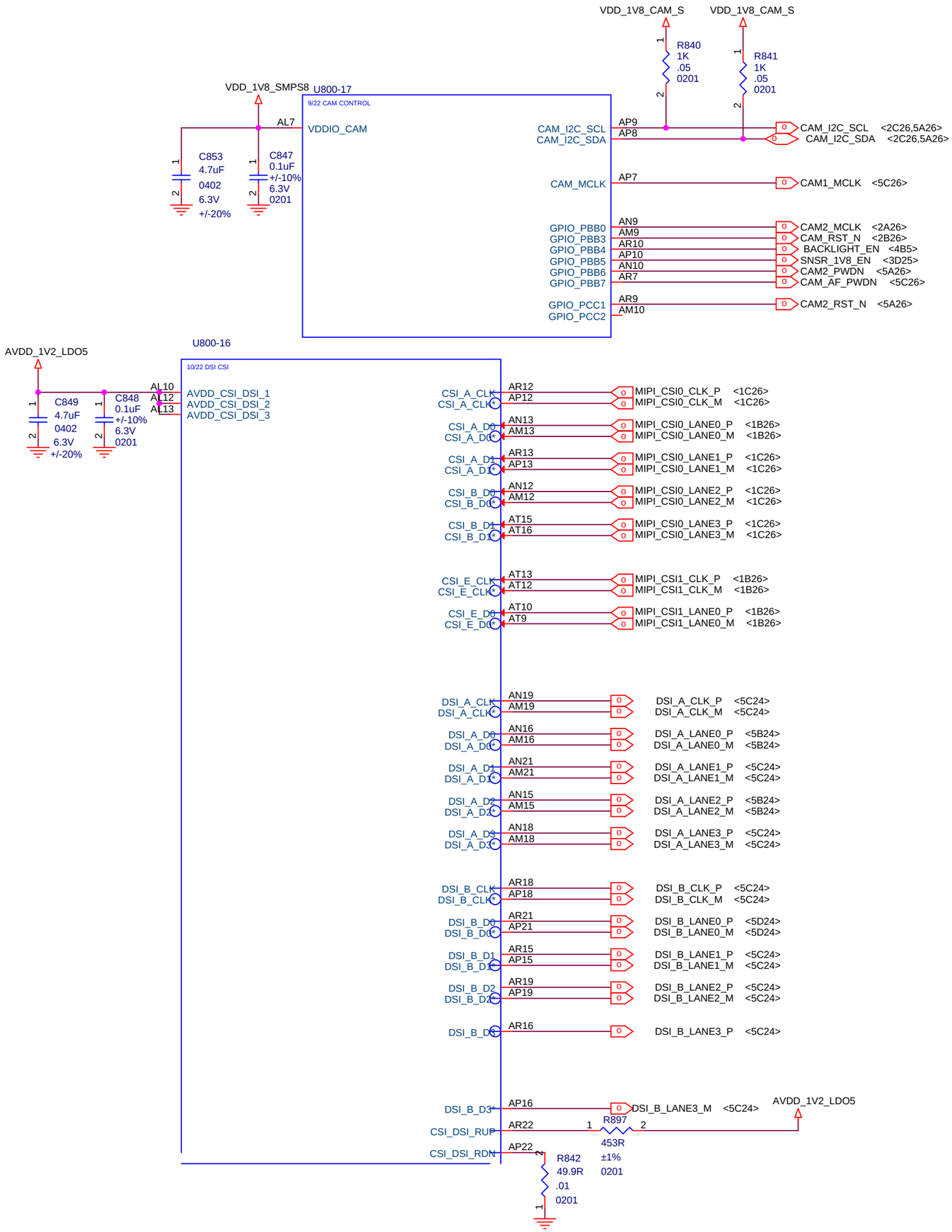


AP40 CAM CSI/DSI

| | | |
|---|---|---|
| Title | MI-THREE | |
| Size A3 | Document Number <Doc> | Rev P2B |
| Date: | Sheet 19 of 26 | |

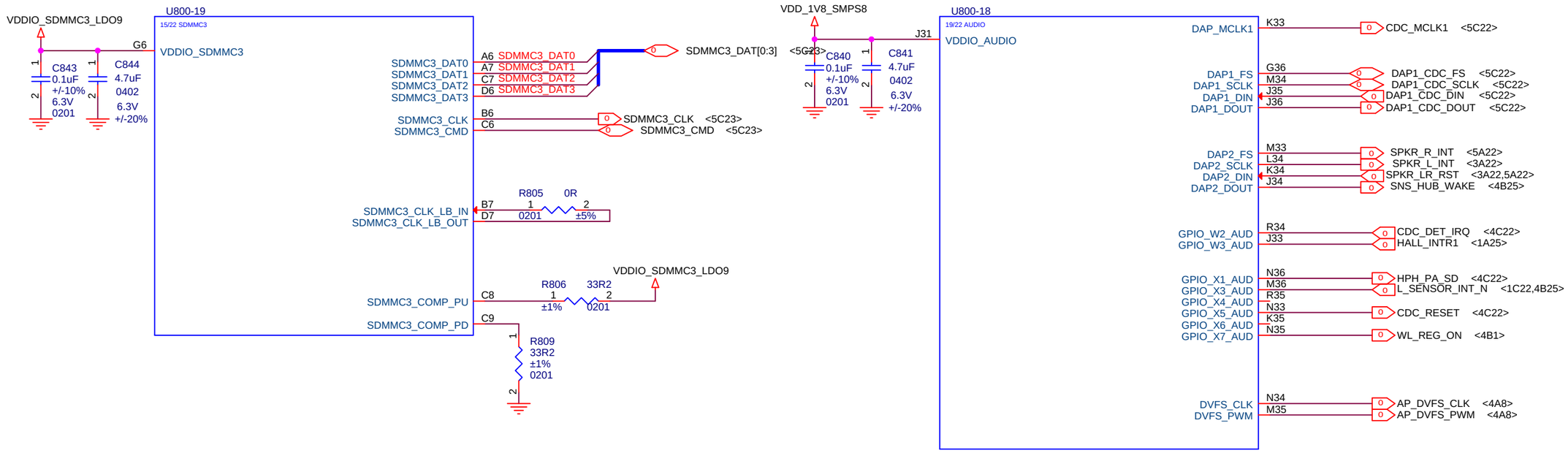


AP40 SD

| | | |
|---|---|---|
| Title | MI-THREE | |
| Size A3 | Document Number <Doc> | Rev P2B |
| Date: | Sheet 20 of 26 | |

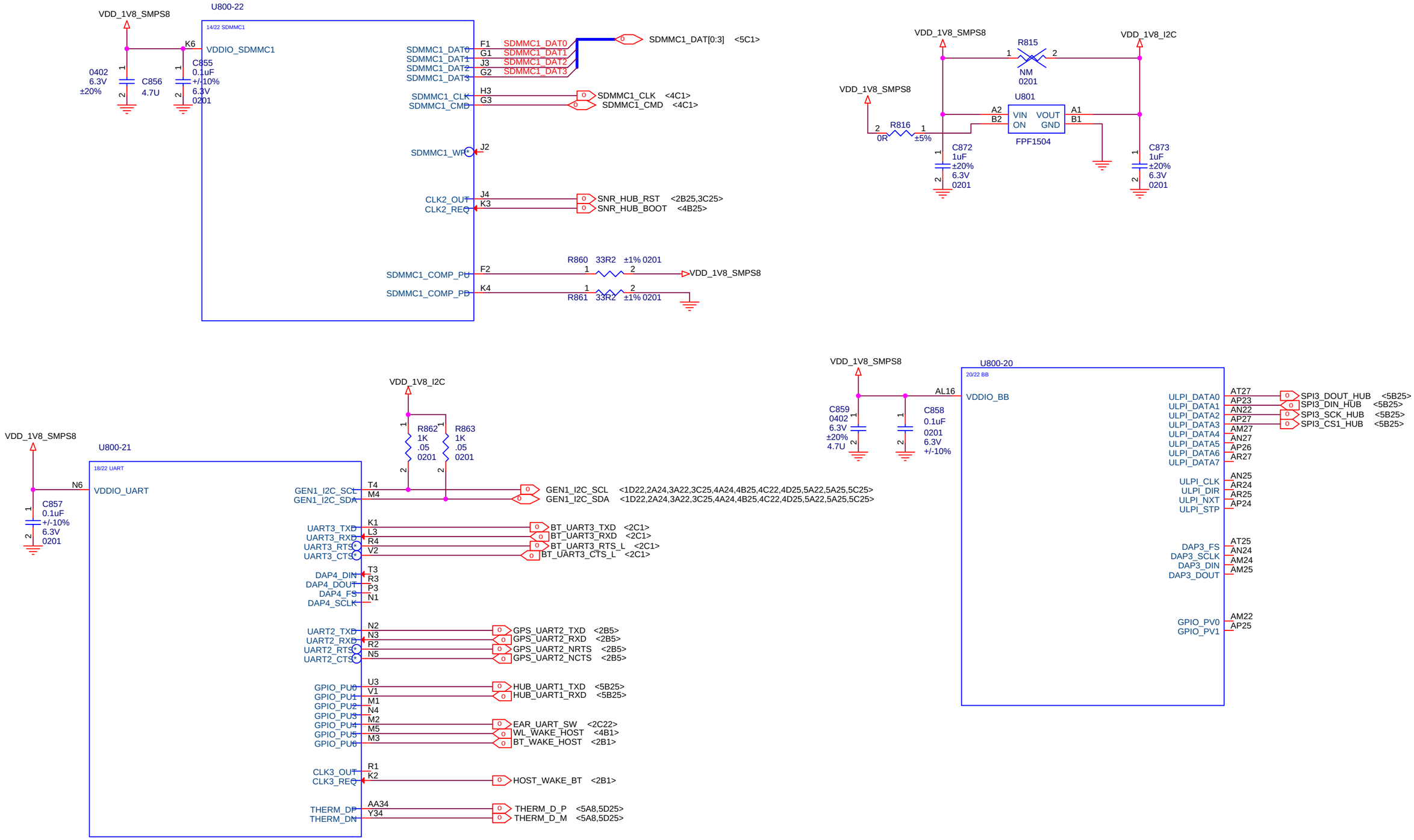


AP40 UARD&BB

| | | |
|---|---|---|
| Title | MI-THREE | |
| Size A3 | Document Number <Doc> | Rev P2B |
| Date: | Sheet 21 of 26 | |

# CODEC

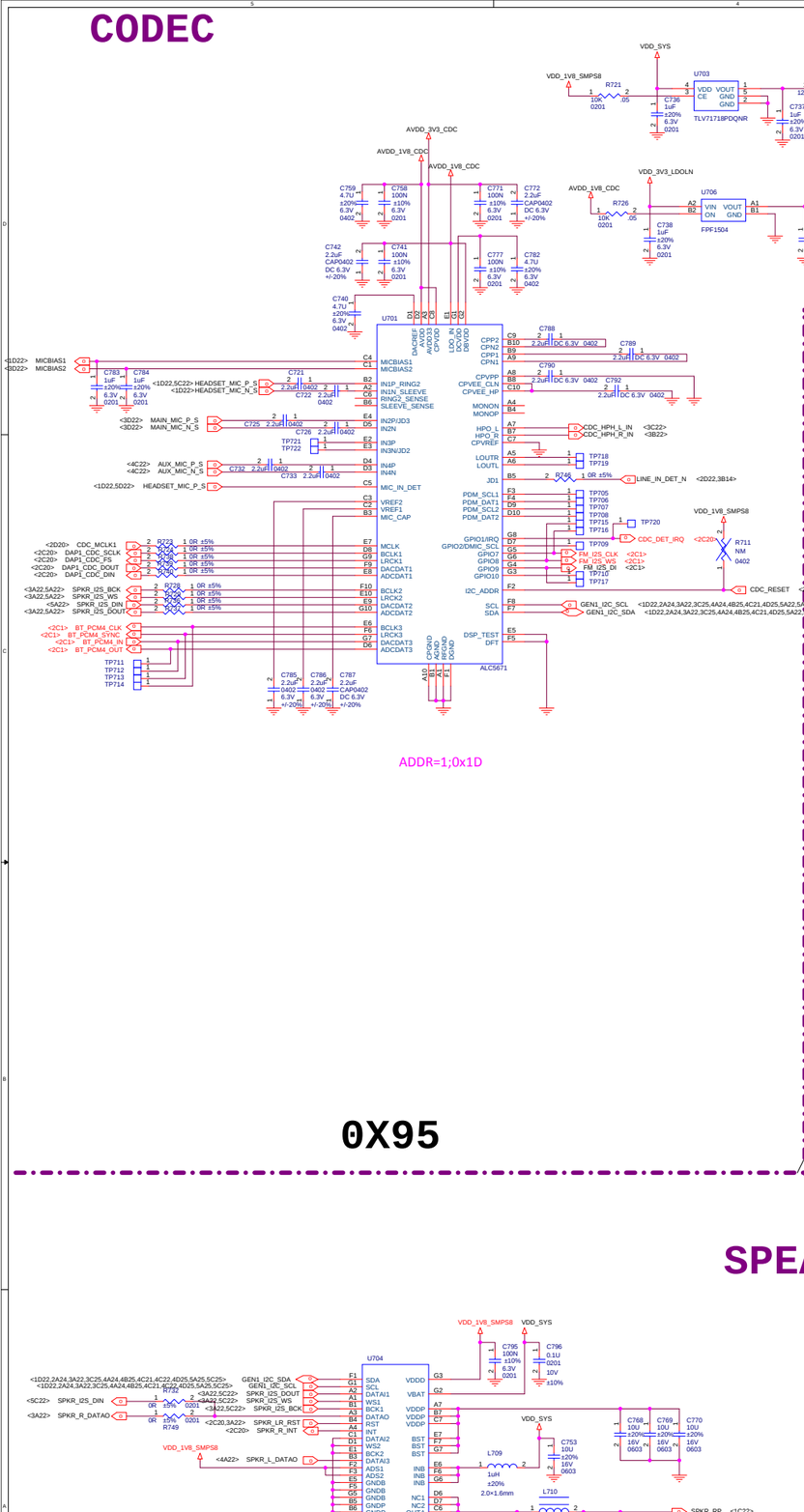


# MAIN Mic

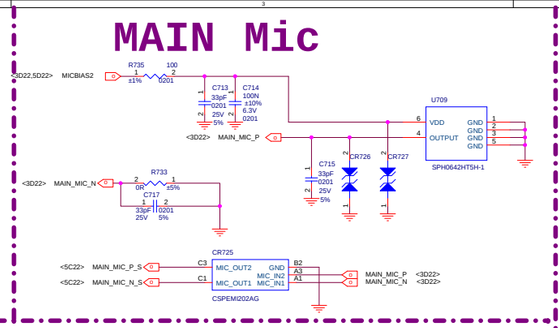


# HEADSET

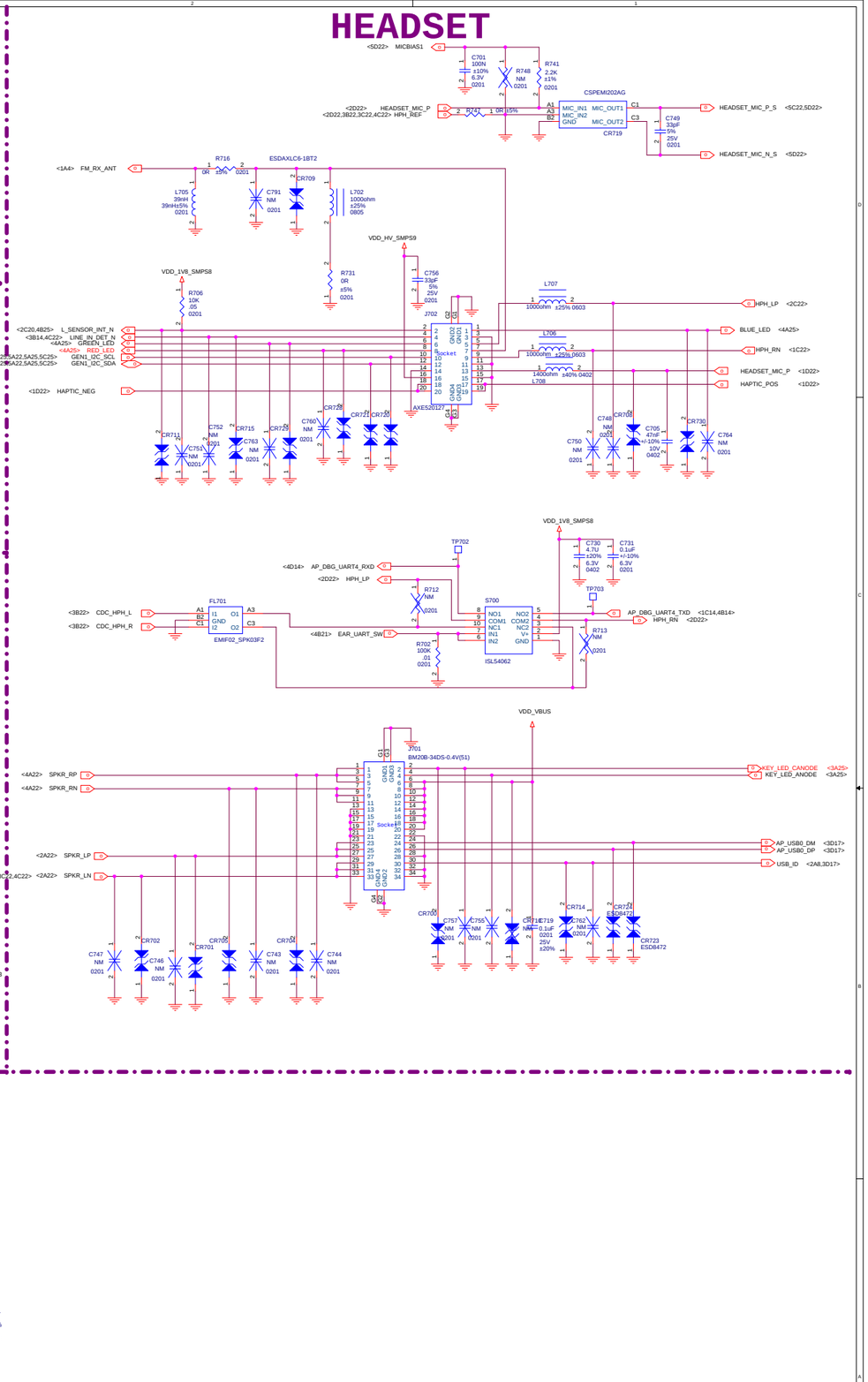


# AUX Mic

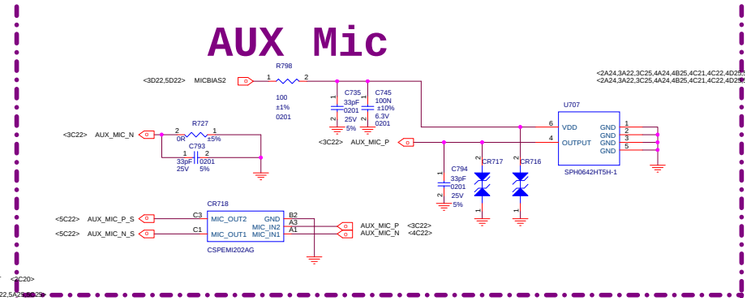


# HEADPHONE PA

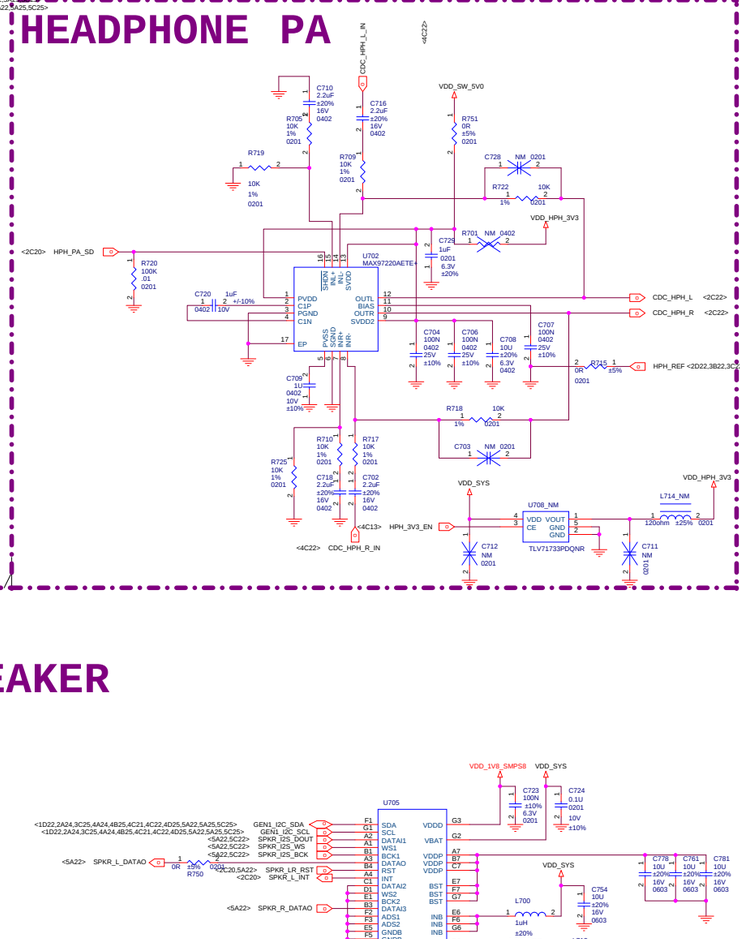


0X95

# SPEAKER

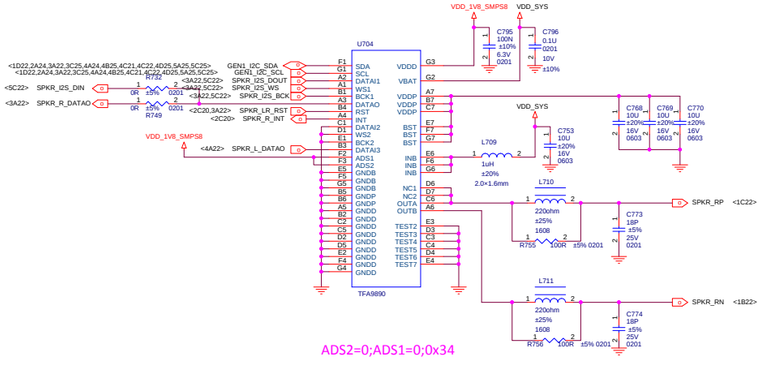


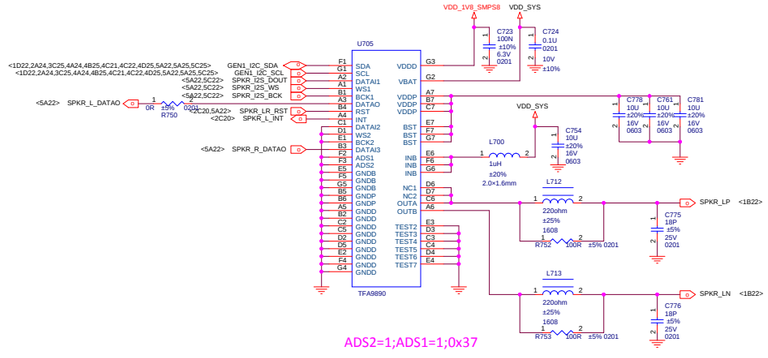


| | | | |
|---|---|---|---|
| Title | <Title> | | |
| Size A1 | Document Number <Doc> | | Rev P2B |
| Date: Wednesday, May 14, 2014 | Sheet 22 of 26 | | |

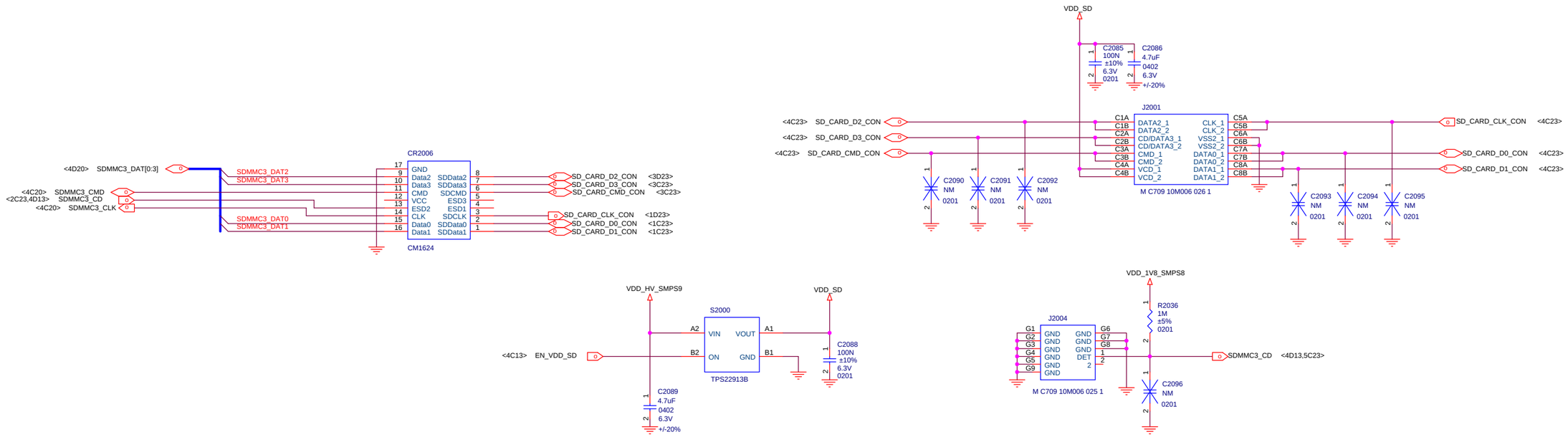


LCD

| Title | | |
|---|---|---|
| MI-THREE | | |
| Size A2 | Document Number <Doc> | Rev P2B |
| Date: | Sheet 23 of 26 | |

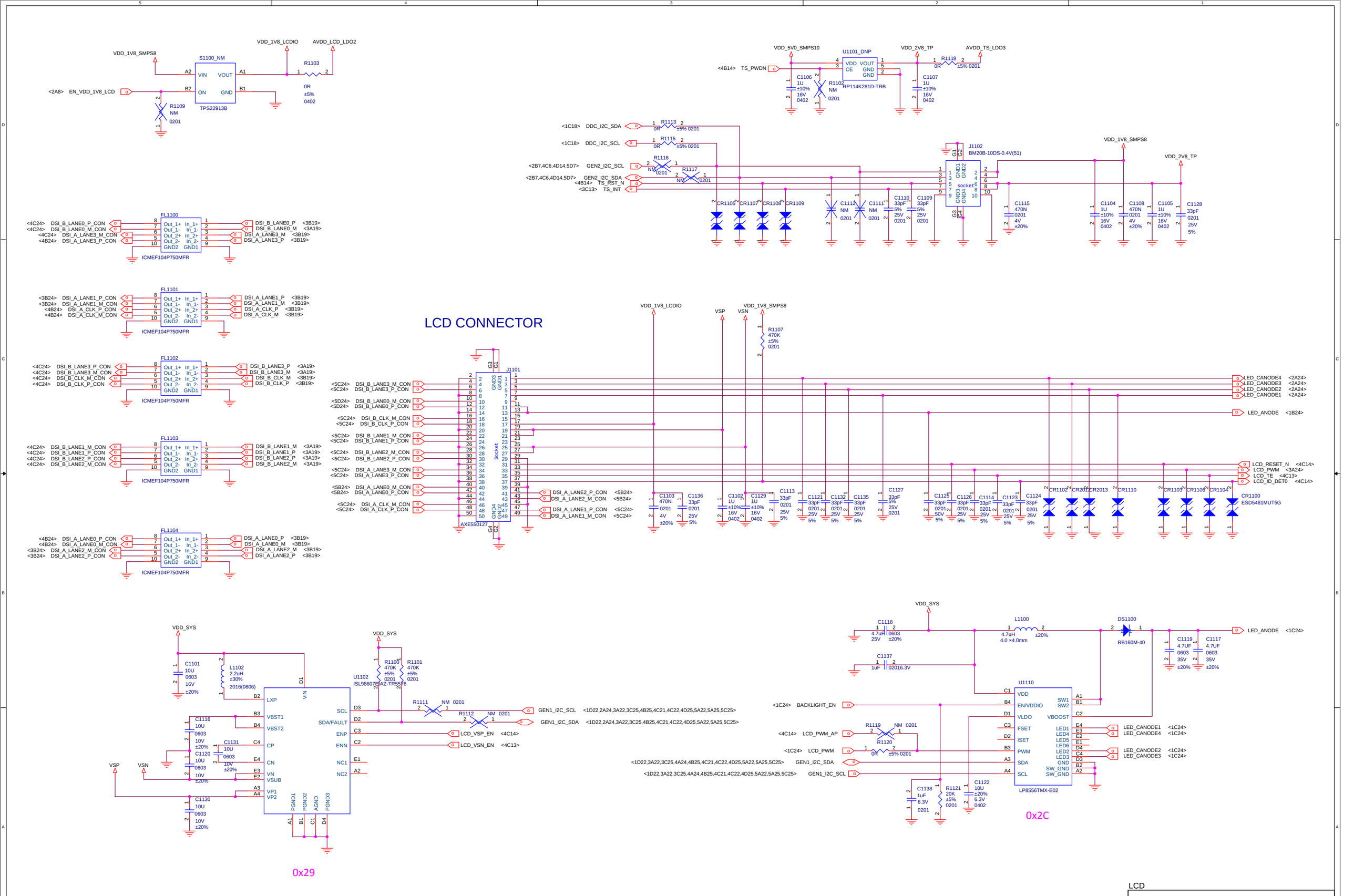


LCD

Title: MI-THREE

Size: A2 | Document Number: <Doc> | Rev: P2B

Date: | Sheet 24 of 26

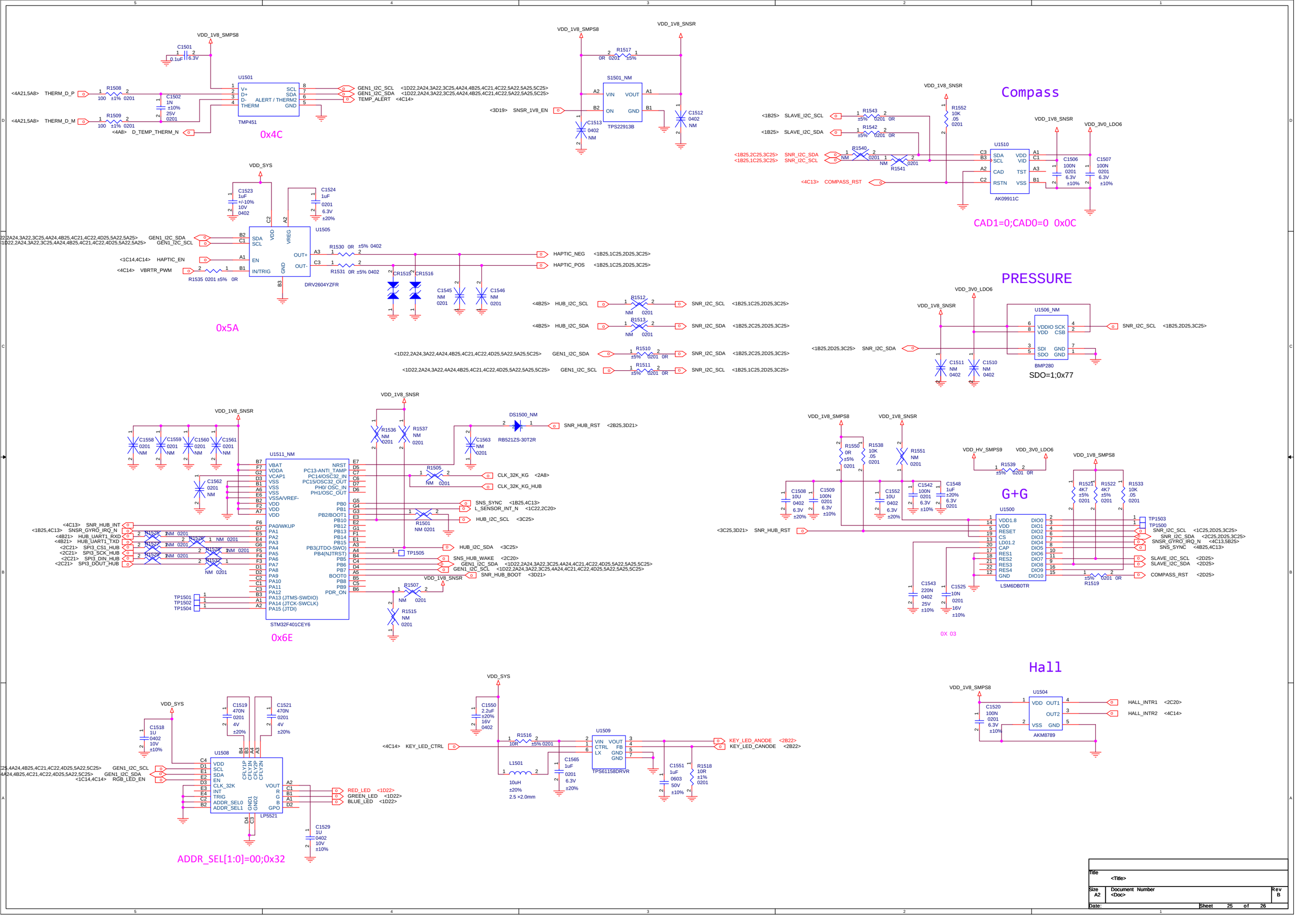


| | | |
|---|---|---|
| Title | <Title> | |
| Size A2 | Document Number <Doc> | Rev B |
| Date: | Sheet 25 of 26 | |

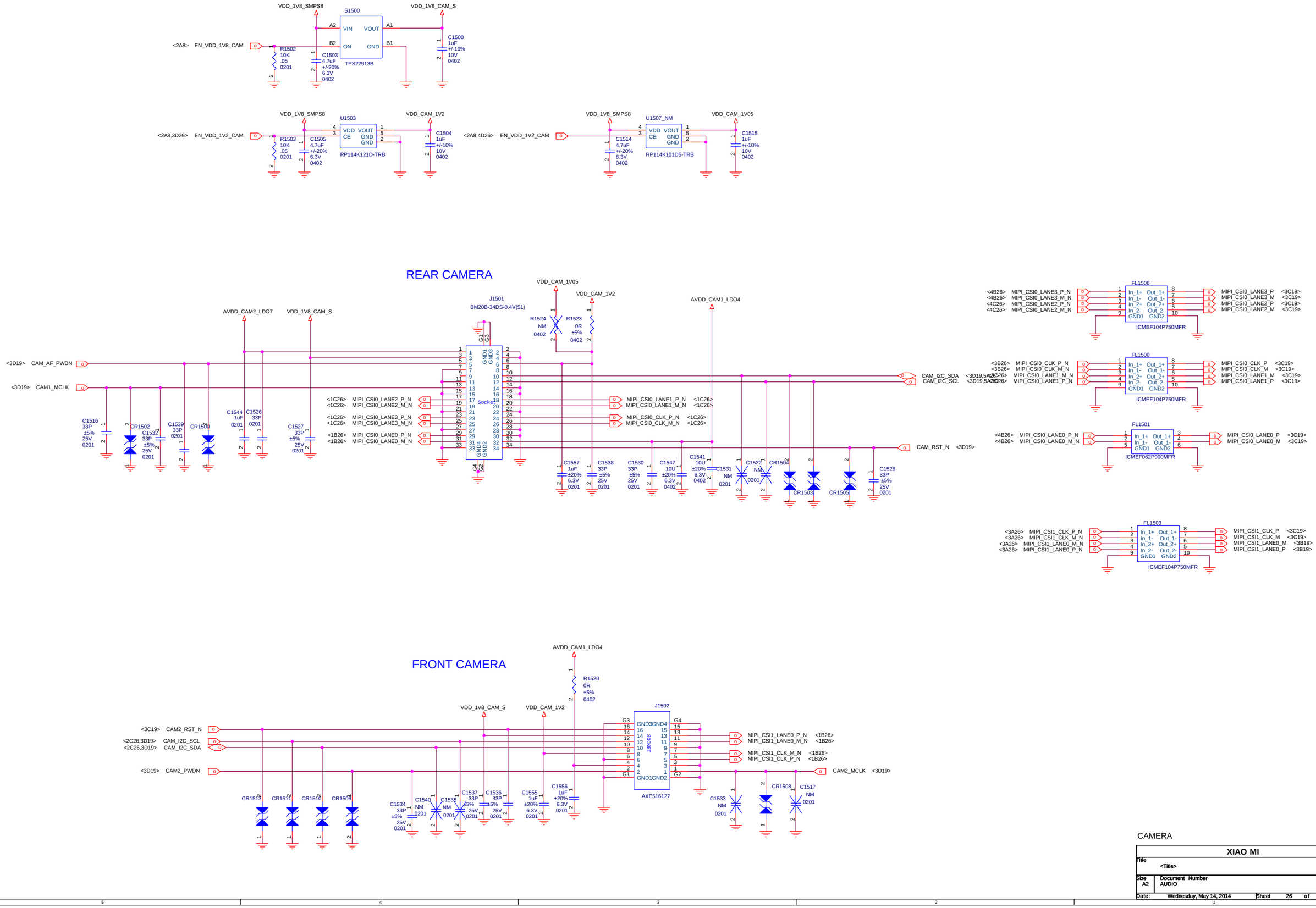


CAMERA

| XIAO MI | | |
|---|---|---|
| Title <Title> | | |
| Size A2 | Document Number AUDIO | Rev P2B |
| Date: Wednesday, May 14, 2014 | Sheet 26 of 26 | |